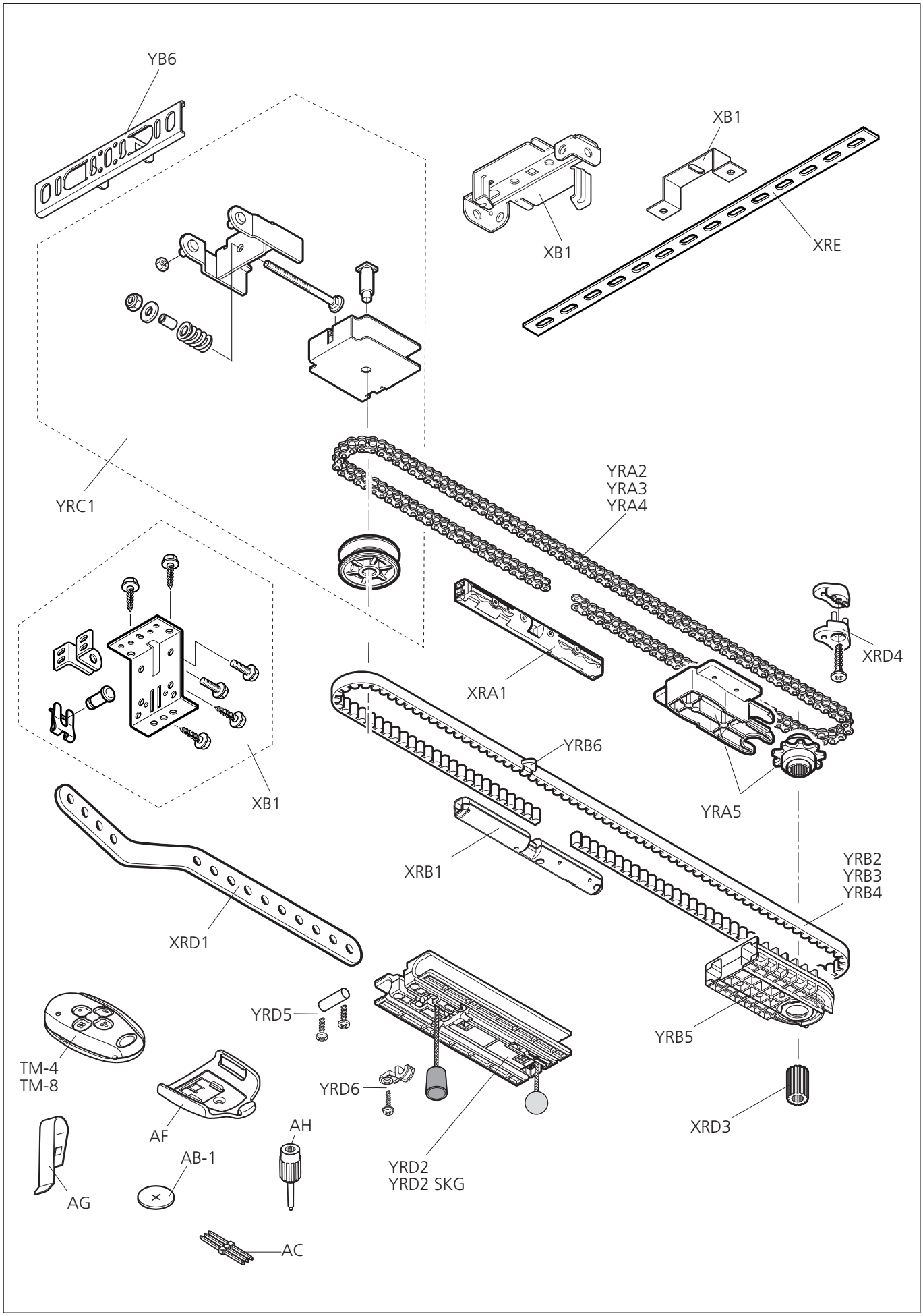New 2008 V-style rails (from after August 2008)